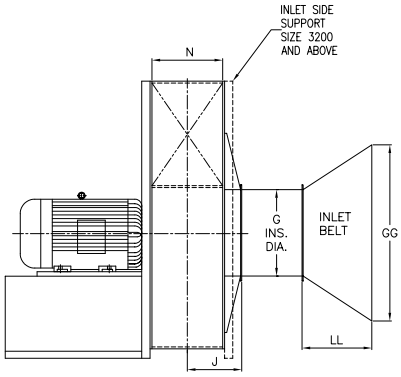

ARRANGEMENT 4

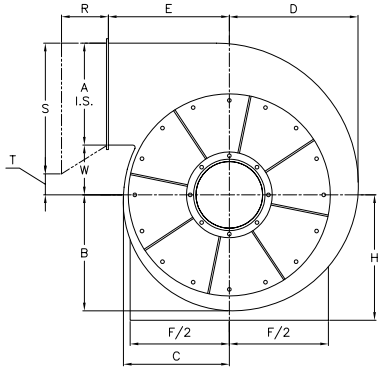

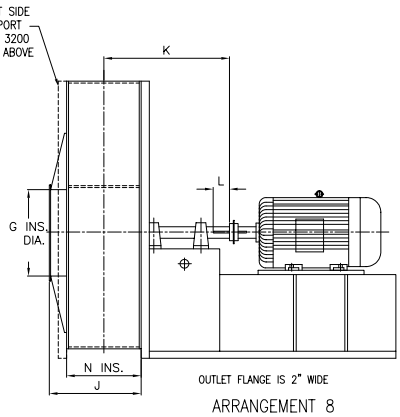

OUTLET FLANGE IS 2" WIDE

ARRANGEMENT 8

DIMENSION – INCHES

FAN SIZE	A	B	C	D	E	F	G	H	J	K (MAX) DIRECT DRIVE	K (MAX) BELT DRIVE	L DIRECT DRIVE	L BELT DRIVE	N
24	12 5/8	17 1/4	15 7/16	19 1/16	17	30 1/2	12 13/16	22 7/8	6 1/4	29 5/8	39 1/4	3	5	6 1/2
26	13 5/8	18 5/8	16 5/8	20 5/8	18 3/8	32	13 15/16	25 1/8	7 1/2	29 7/8	39 1/4	3	5	7
28	14 5/8	20 1/16	17 15/16	22 3/16	19 3/4	35	15	26 13/16	7 13/16	30 3/4	41 1/2	3	6	7 5/8
30	15 3/4	21 7/16	19 1/8	23 3/4	21 1/8	37	15 15/16	29 1/16	9 1/8	30 7/8	41 1/2	3	6	8 1/4
32	16 7/8	23	20 9/16	25 7/16	22 1/2	42	17 1/16	30 7/8	9 3/8	31 1/4	42 5/8	2 1/2	7	8 3/4
36	18 7/8	25 13/16	23 1/16	28 9/16	25 1/4	46	19 1/4	34 5/16	9 7/8	34 5/8	49 3/4	3 3/4	8	9 3/4
40	21	28 11/16	25 5/8	31 3/4	28	50	21 1/2	37 13/16	10 7/16	36	50 1/2	3 3/4	8	10 7/8
44	23	31 1/2	28 1/8	34 7/8	30 3/4	54	23 3/4	41 3/4	11 15/16	36 1/4	52	3 3/4	8	11 7/8
48	25	34 1/4	30 9/16	37 15/16	33 1/2	58	25 7/8	45 1/8	12 7/16	35 5/8	52 1/2	3 3/4	8	12 7/8
52	27 1/8	37 1/8	33 1/8	41 1/8	36 1/4	64	28 1/8	48 5/8	13	42 7/8	58 1/8	5 1/4	8	14
56	29 1/4	40	35 11/16	44 5/16	39	68	30 1/16	52 1/8	13 9/16	44 3/8	58 3/4	5 1/4	8	15 1/8
60	31 3/8	42 7/8	38 1/4	47 1/2	41 3/4	72	32 5/16	55 3/8	14 1/16	45	59 1/4	5 1/4	8	16 1/8

FAN SIZE	R	S	T	W	INLET BELT DIMENSION GG	INLET BELT DIMENSION LL
24	14 3/8	19 1/4	1 5/8	8 1/4	19 5/8	6
26	15 1/2	20 3/4	1 7/8	9	21 11/32	6 1/2
28	16 3/4	22 3/8	1 15/16	9 11/16	22 31/32	7
30	17 7/8	24 1/8	1 15/16	10 5/16	24 15/32	7 1/2
32	19 1/8	25 5/8	2 1/4	11	26 5/32	8
36	21 1/2	28 3/4	2 9/16	12 7/16	29 1/2	9
40	23 7/8	32	2 13/16	13 13/16	32 29/32	10
44	26 1/4	35 1/8	3 1/8	15 1/4	36 1/4	11
48	28 5/8	38 1/4	3 3/8	16 5/8	39 17/32	12
52	31	41 1/2	3 5/8	18	42 15/16	13
56	33 3/8	44 3/4	3 7/8	19 3/8	46 1/32	14
60	35 3/4	47 7/8	4 1/4	20 3/4	49 13/32	15

ITEM NO	IDENTIFICATION	NO REQ'D	FAN SIZE	DISCH. &ROT.	WHEEL TYPE	CL.	PERFORMANCE C.F.M.	O.V.	S.P.	R.P.M.	B.H.P.	TEMP.	ELEV.	MOTOR DATA H.P.	R.P.M.	CURRENT	FRAME	TYPE

ITEM NO	DRIVE DATA MTR.SHEAVE	FAN SHEAVE	BELTS	CENTER	MOTOR	VIBR. BASE TYPE	SPECIAL FEATURES

SPECIAL FEATURES

A=FLANGED OUTLET
B=FLANGED INLET
C=OUTLET DAMPER
D=CLEANOUT DOOR; TYPE:
1.QUICK CLAMP
2.BOLTED
3.PLUG
E=SHAFT COOLER AND GUARD
F=DRAIN OPENING
G=SHAFT SEAL
H=SPLIT HOUSING
J=SPECIAL FINISH–SEE NOTES SPARK RESISTANT CONSTRUCTION, TYPE 'C'
L=INLET COLLAR

CUSTOMER _____

P.O.# _____

JOB NAME _____

LOCATION _____

SERIES 5900 SIZES 24" TO 60"
ADJUSTABLE HOUSING ARRANGEMENT NO 4 & 8

SHELDONS ENGINEERING

www.sheldonsengineering.com
sales@sheldonsengineering.com

FURNISHED FOR SALES PURPOSE DIMENSIONS NOT CERTIFIED	DATE	SUBMITTED BY	SALES OFFICE
DRAWING CERTIFIED BY S.E. FURNISHED FOR APPROVAL–NOT RELEASED FOR PRODUCTION	DATE	ENGINEER	SO#
DRAWING CERTIFIED BY S.E. APPROVAL–NOT REQUIRED–RELEASED FOR PRODUCTION	DATE	ENGINEER	DWG#